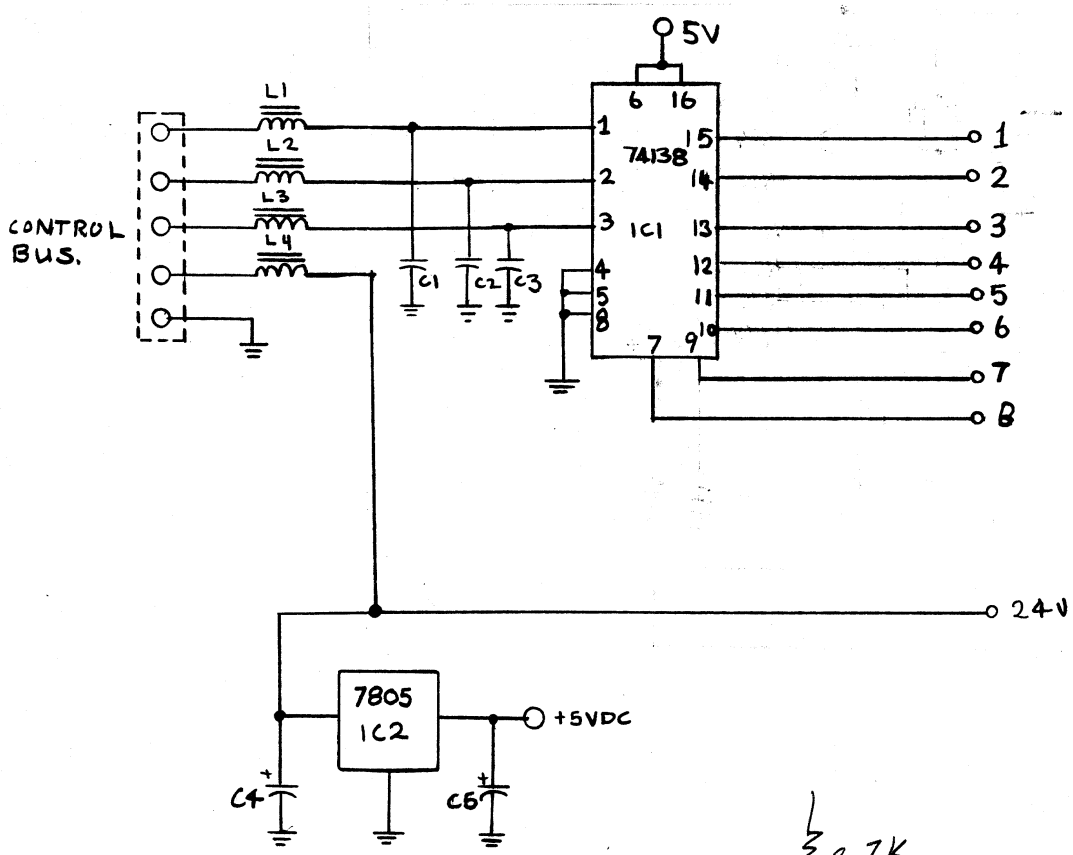

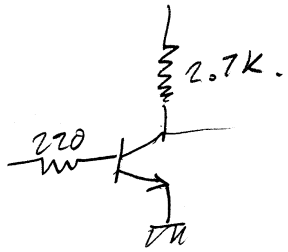

L1-L4.... 15 T ON FB-43-2401
#18 GAUGE

C1-C3....005 µF 50V

C4-C6 ... .33 µF, 50V ELECT.

R1-R8... 220 Ω

Q1-Q8... 2N2907A

RY1-RY16... 24V, 2A, 4PDT.

DATE	3 OCT 87	SUJET SUBJECT	RELAY UNIT SCHEMATIC
DESSINE DRWG BY	AER.		
VÉRIFIÉ CHKD BY			
			ROBOT TELECOMMUNICATIONS
FEUILLE SHEET	10	DE OF	11
NO REF. JOB NO.			
ÉCHELLE SCALE			